BETTER HOME PRODUCTS

SKYLINE TWO HANDLE WIDESPREAD FAUCET SPECIFICATIONS

FEATURES:

* Two Handle 8” - 16” center to center 3 hole installation.
* Quick push-in auto lock hose connections.
* Durable ceramic disc valves.
* Metal construction for durability and reliability.
* 1/4 turn handle stops.
* 1/2” - 14 NPSM threaded male inlet shanks.
* Maximum 1.2 gpm @ 60 psi. 5.4 L/ min @ 414 kPa.
* Packed with matching finish pop-up drain assembly.

WARRANTY:

* Limited lifetime mechanical function warranty against leaks and drips to the original residential homeowner/user.
* 10 year mechanical function warranty against leaks and drips when used in a multifamily installation.
* 5 year mechanical function warranty against leaks and drips when used in a commercial installation.
* 5 year finish warranty on all installation types, on all finishes.

ITEM NUMBERS:

F39811DB - Dark Bronze Finish
F39815SN - Satin Nickel Finish
F39844BLK - Matte Black Finish
F39888CH - Chrome Finish

STANDARDS:

ASME A112.18.1 / CSA B125. 1
NSF/ANSI/CAN 372 Lead Free
EPA WaterSense
ADA for Lever Handles
Q ≤ 1

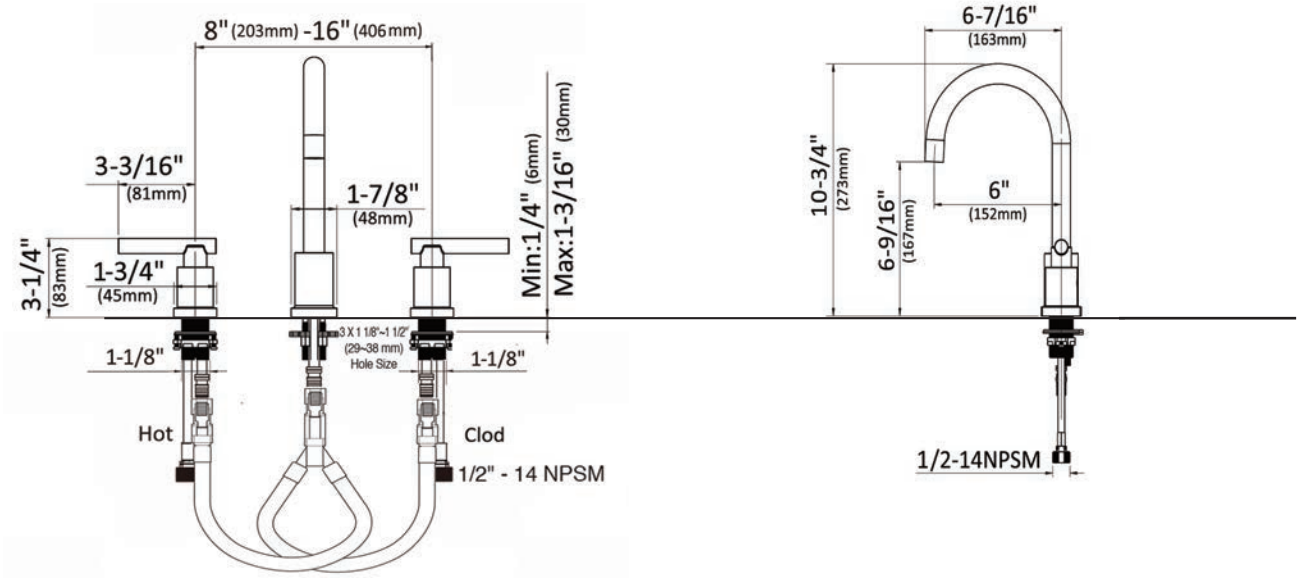

CRITICAL DIMENSIONS